Technical Data

IS4P Enclosed Rotary Isolators

IP66



- 4 Pole Range available from 20A to 150A
- IP66 Protection Rating (enclosure)
- EN 60947-3 Compliant
- 3 Sizes of Enclosure
- Multiple Gland Knockouts
- Lockable Rotary Handle
- Flame Retardant
- External Mounting Points
- Additional Earth Connection
- Interlocked Enclosure Lid

ORDERING INFORMATION

Part Number	Current I_e (AC21)	Rated Operating Voltage	Poles
IS4P20	20A	230 - 440V	4
IS4P20L	20A	230 - 440V	4
IS4P32	32A	230 - 440V	4
IS4P32L	32A	230 - 440V	4
IS4P40	40A	230 - 440V	4
IS4P63	63A	230 - 440V	4
IS4P80	80A	230 - 440V	4
IS4P100	100A	230 - 440V	4
IS4P125	125A	230 - 440V	4
IS4P150	150A	230 - 440V	4

DIMENSIONS (mm)

Part Number	Height	Width	Depth	Depth inc. Handle	Gland Knockouts
IS4P20	125	100	85	120	M20/25
IS4P20L	175	115	100	135	M20/25
IS4P32	125	100	85	120	M20/25
IS4P32L	175	115	100	135	M20/25
IS4P40	175	115	100	135	M20/25
IS4P63	175	115	100	135	M20/25
IS4P80	240	160	120	165	M20/25/32
IS4P100	240	160	120	165	M20/25/32
IS4P125	240	160	120	165	M20/25/32
IS4P150	240	160	120	165	M20/25/32

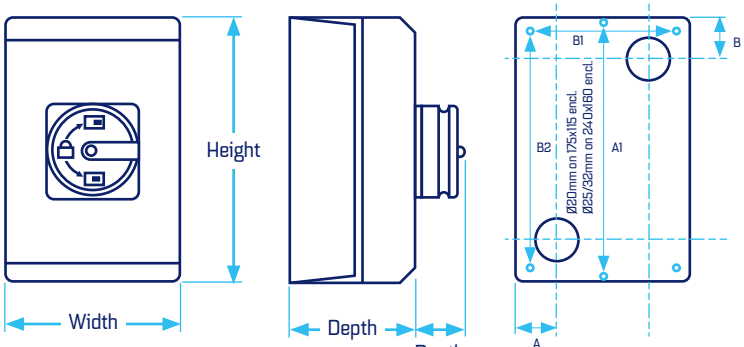

Mounting Holes

For IS4P20 & IS4P32 / IS4P20L, IS4P32L, IS4P40 & IS4P63
A1: 115mm / 165mm
For IS4P80, IS4P100, IS4P125 & IS4P150
B1: 142mm, B2: 193mm

Rear Knockouts

A: 27.5mm on 175x115mm enclosure
42mm on 240x160mm enclosure
B: 25mm on 175x115mm enclosure
42.0mm on 240x160mm enclosure

GENERAL INFORMATION

Enclosure Material	Polycarbonate
Lid Screw Material	Stainless Steel
Ingress Protection	IP66 Enclosure / IP20 Body
Interlocked Handle	In ON Position
Approvals	UKCA, CE, SEMKO
Compliance	IEC EN 60947-3, RoHS

TECHNICAL SPECIFICATION

Part Number	IS4P20	IS4P20L	IS4P32	IS4P32L	IS4P40	IS4P63	IS4P80	IS4P100	IS4P125	IS4P150
Poles	4	4	4	4	4	4	4	4	4	4
Rated Operational Current I_e (AC21) (A)	20	20	32	32	40	63	80	100	125	150
Rated Power of 3Ph Motor at 415V (AC23A) (kW)	5.5	5.5	11	11	15	22	30	37	45	70
Rated Voltage (V)	415	415	415	415	415	415	415	415	415	415
Frequency (Hz)	50/60	50/60	50/60	50/60	50/60	50/60	50/60	50/60	50/60	50/60
Rated Insulation Voltage U_i (V)	690	690	690	690	690	690	690	690	690	690
Max. Cable Size (Solid/Stranded) (mm^2)	10	10	10	10	10	16	35	35	35	35
Rated Cond. Short Circuit Current (A)	20 I_e	20 I_e	20 I_e	20 I_e	20 I_e	20 I_e	20 I_e	20 I_e	20 I_e	20 I_e
Short Time Withstand Current 415V 1 sec. (A)	12 I_e	12 I_e	12 I_e	12 I_e	12 I_e	12 I_e	12 I_e	12 I_e	12 I_e	12 I_e
Rated Make/Break Capacity (A)	8 I_e	8 I_e	8 I_e	8 I_e	8 I_e	8 I_e	8 I_e	8 I_e	8 I_e	8 I_e
Protection Degree	IP66	IP66	IP66	IP66	IP66	IP66	IP66	IP66	IP66	IP66
Tightening Torque (Contacts / Lid) (Nm)	2 / 1.2	2 / 1.2	2 / 1.2	2 / 1.2	2 / 1.2	2 / 1.2	3 / 1.2	3 / 1.2	3 / 1.2	3 / 1.2
Mechanical Life (10^3)	10	10	10	10	10	10	10	10	10	10
Weight (kg)	0.52	0.75	0.52	0.75	0.75	0.75	1.34	1.34	1.34	1.34

For more information, email ***sales@stag-electrical.com***

Technical Data

SAC Auxiliary Contacts



- Auxiliary Contact for Stag Rotary Isolators
- EN 60947-3 Compliant
- 3 Sizes Covering Entire Isolator Range
- Fits on Left Hand Side
- 1 NO & 1NC Contacts

ORDERING INFORMATION

Part Number	Fits
SAC32-11	IS4P20, IS4P20L, IS4P32, IS4P32L
SAC63-11	IS4P40, IS4P63
SAC150-11	IS4P80, IS4P100, IS4P125, IS4P150

WIRING

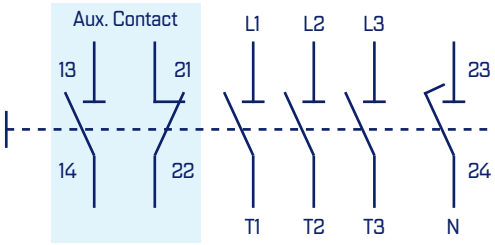

DIMENSIONS (mm)

SAC32-11

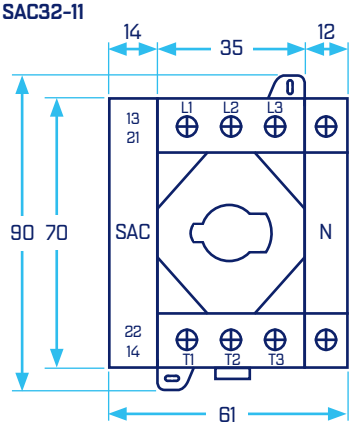

SAC63-11

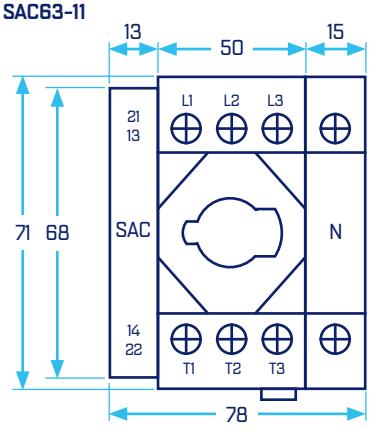

SAC150-11

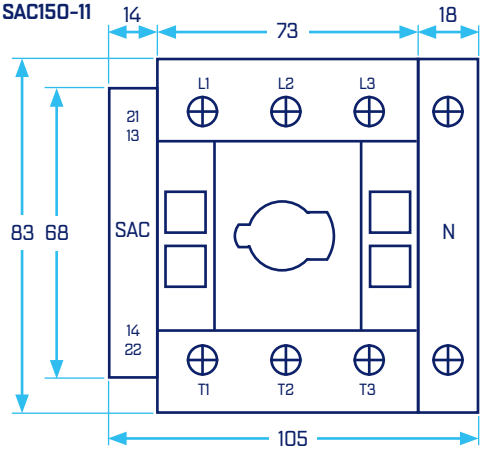

TECHNICAL SPECIFICATION

Part Number	SAC32-11	SAC63-11	SAC150-11
Contact Configu ation	1 Normally Open (NO), 1 Normally Closed (NC)		
Rated Operational Current I_e (AC15) (A) 230V	6	6	6
Rated Operational Current I_e (DC13) (A) 125V	1.1	1.1	1.1
Rated Operational Current I_e (DC13) (A) 250V	0.55	0.55	0.55
Rated Insulation Voltage U_i (V)	500	500	500
Maximum Fuse (A) gG/gL	10	10	10
Max. Cable Size (Solid) (mm^2)	0.75 - 2.5	0.75 - 2.5	0.75 - 2.5
Max. Cable Size (Flexible with Ferrule) (mm^2)	0.5 - 1.5	0.5 - 1.5	0.5 - 1.5
Tightening Torque (Nm)	0.6	0.6	0.6
Control Circuit Reliability at 24V DC, 10mA (H_F)	< 10^{-5}, < 1 fault in 100,000 operations		
Compliance	IEC EN 60947-3, RoHS		
Approvals	UKCA, CE		